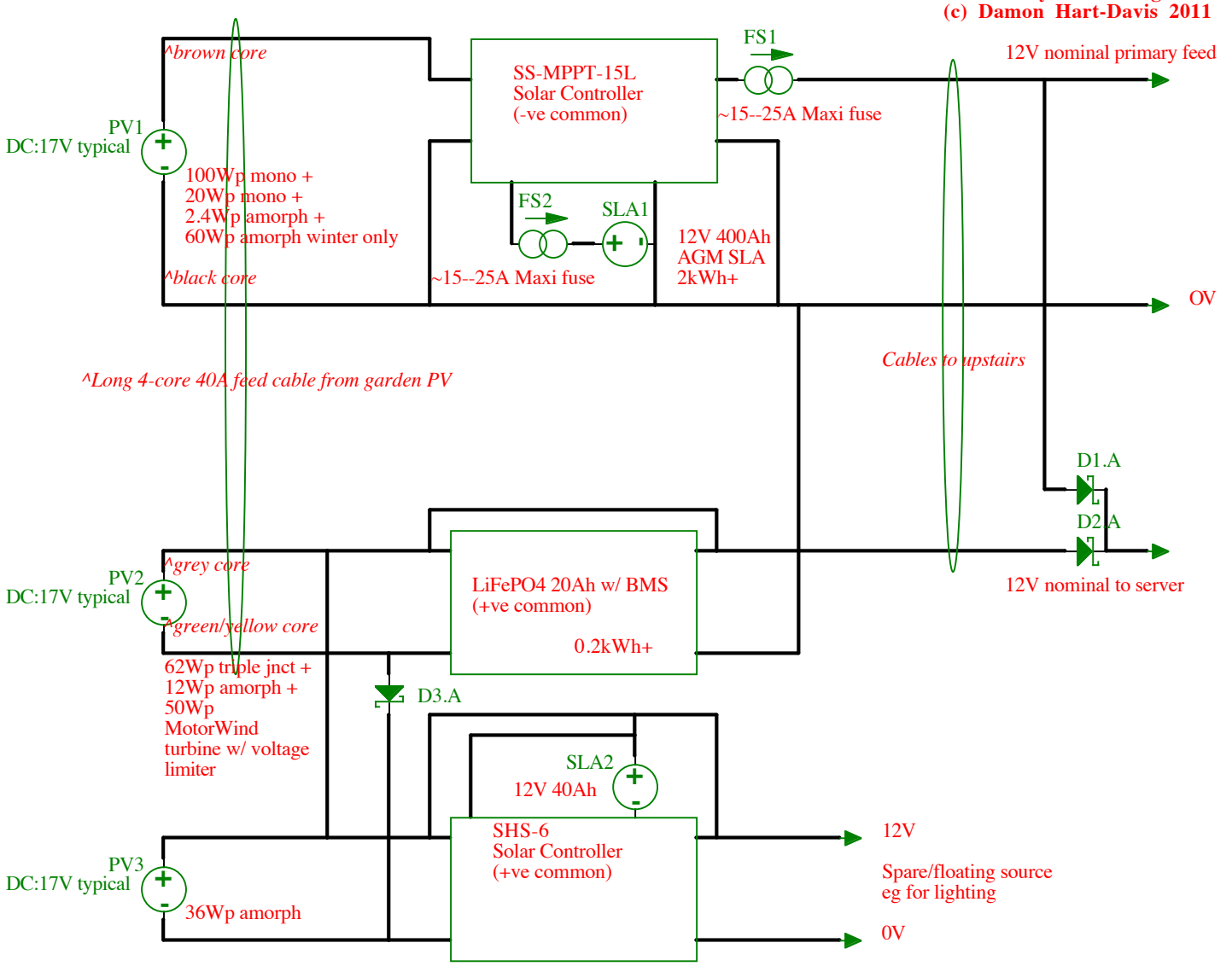20110101 V2
Planned system configuration
(c) Damon Hart-Davis 2011