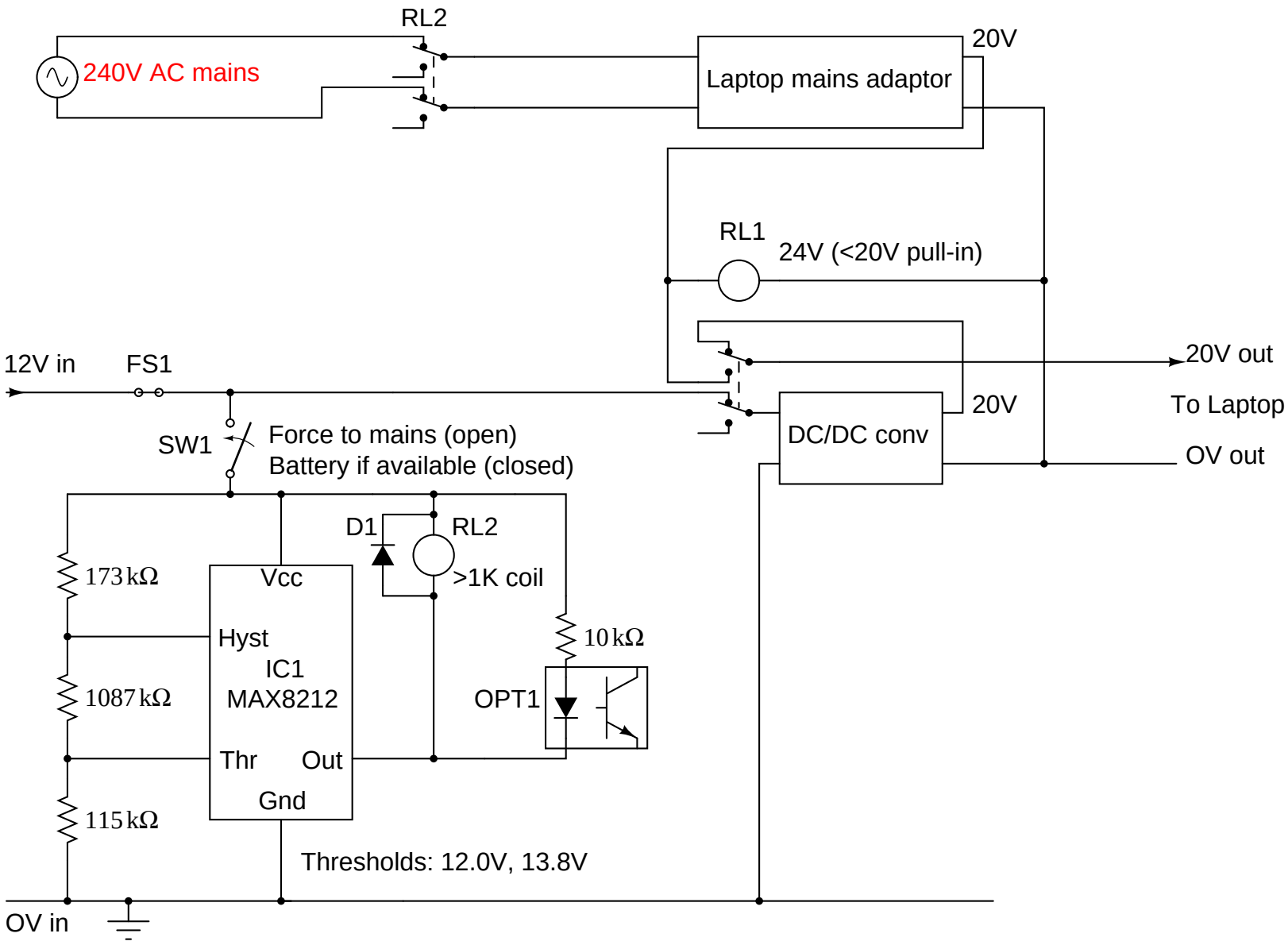12V (lead-acid battery) Laptop Battery Supply w/ Mains Fa**llback** 2007/07/01